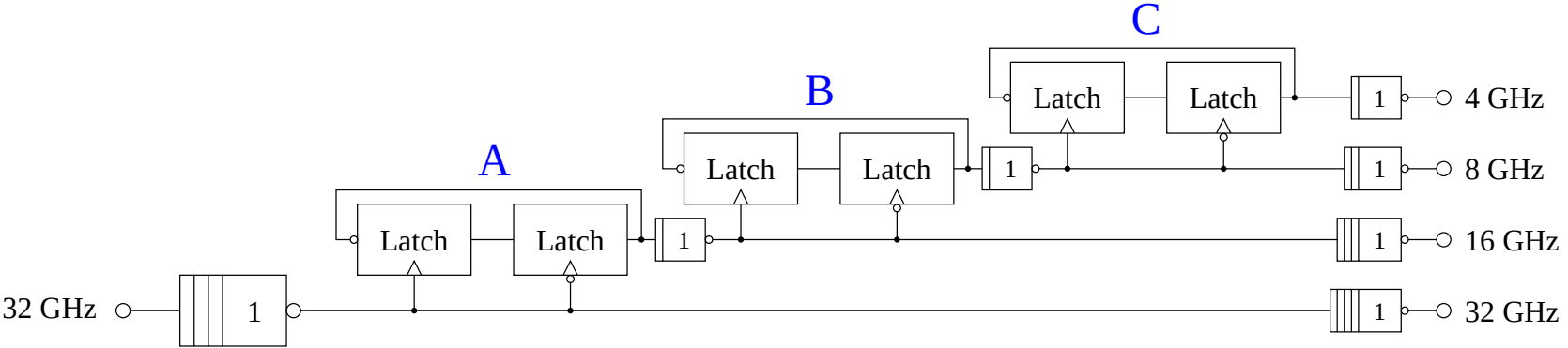
C
B
A
Latch
Latch
Latch
Latch
Latch
Latch
1
1
1
1
1
1
1
4 GHz
8 GHz
16 GHz
32 GHz
32 GHz