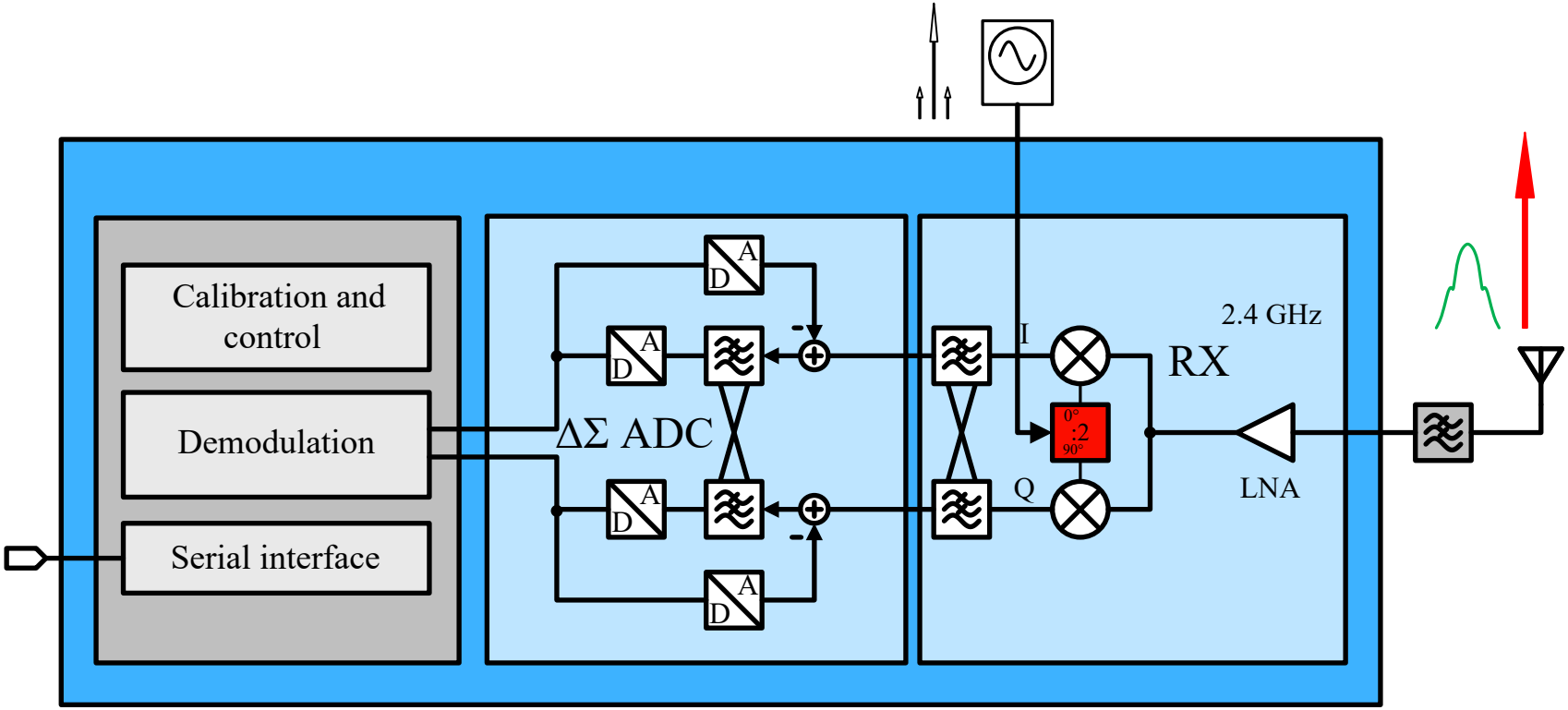
Calibration and control
Demodulation
Serial interface
ΔΣ ADC
A
D
I
Q
0°
:2
90°
2.4 GHz
RX
LNA