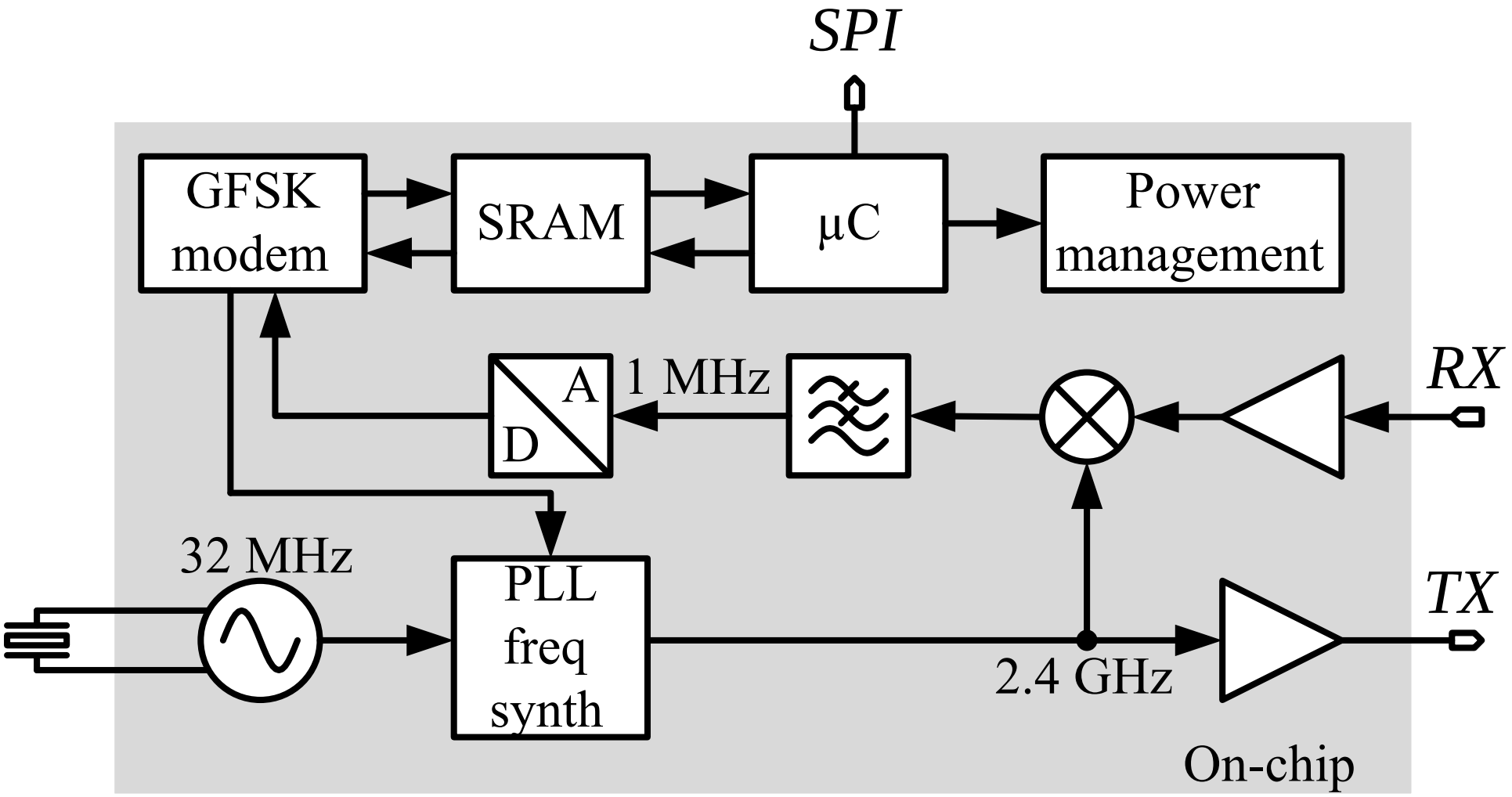
SPI
GFSK modem
SRAM
µC
Power management
A
D
1 MHz
RX
32 MHz
PLL freq synth
TX
2.4 GHz
On-chip