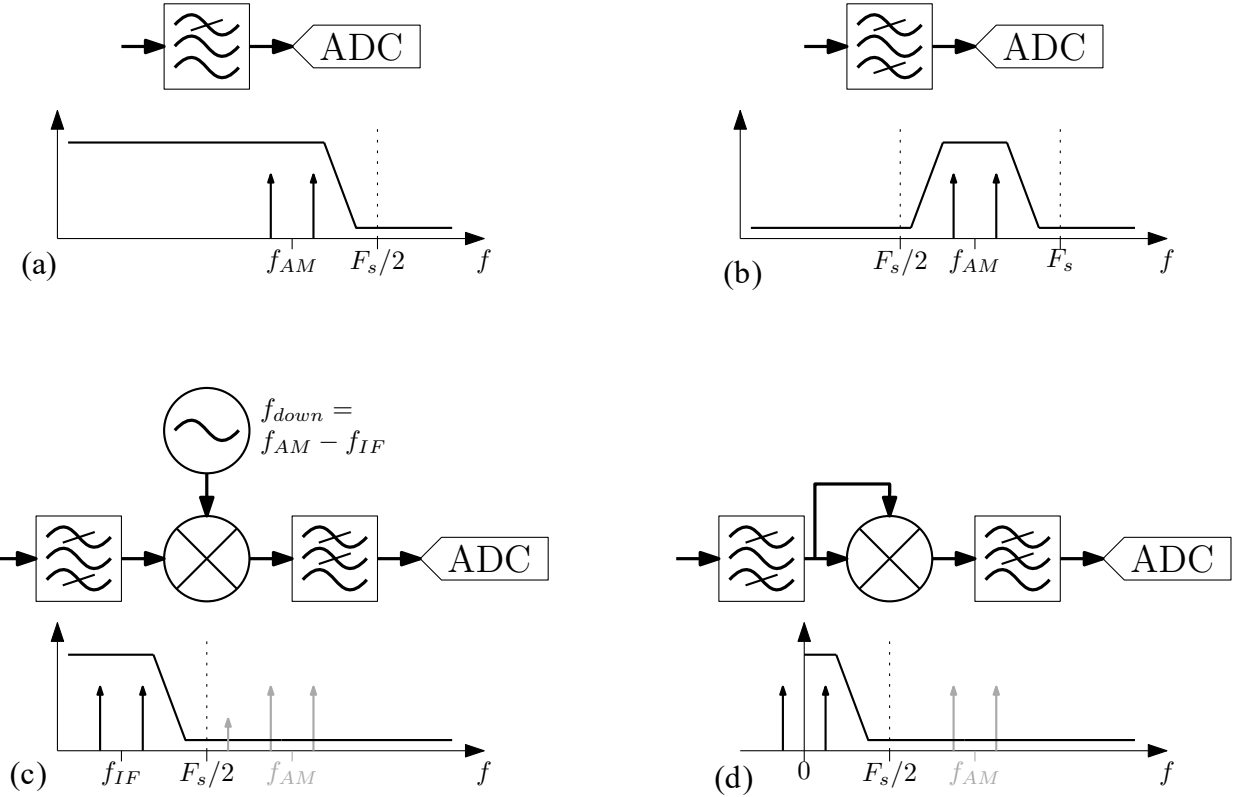
ADC
(a)
f_{AM}
$F_s/2$
f
ADC
(b)
$F_s/2$
f_{AM}
F_s
f
$f_{down} =$
$f_{AM} - f_{IF}$
ADC
(c)
f_{IF}
$F_s/2$
f_{AM}
f
ADC
(d)
0
$F_s/2$
f_{AM}
f